FIRST ANGLE							
LENGTH/ DIAMETER	0.5-6	>6-30	>30-120	>120-400	>400-1000	>1000-2000	>2000-4000
TOLERANCE	±0.1	±0.2	±0.3	±0.5	±0.8	±2	±

RADIUS/ CHAMFER	0.5-3	>3-6	>6
TOLERANCE	±0.2	±0.5	±

ANGLE (shorter side length)	0-10	>10-50	>50-120	>120-400	>400
TOLERANCE	±1°	±0.5°	±0.3°	±0.15°	±0.1°

REV	ECN	DATE	APPROVED

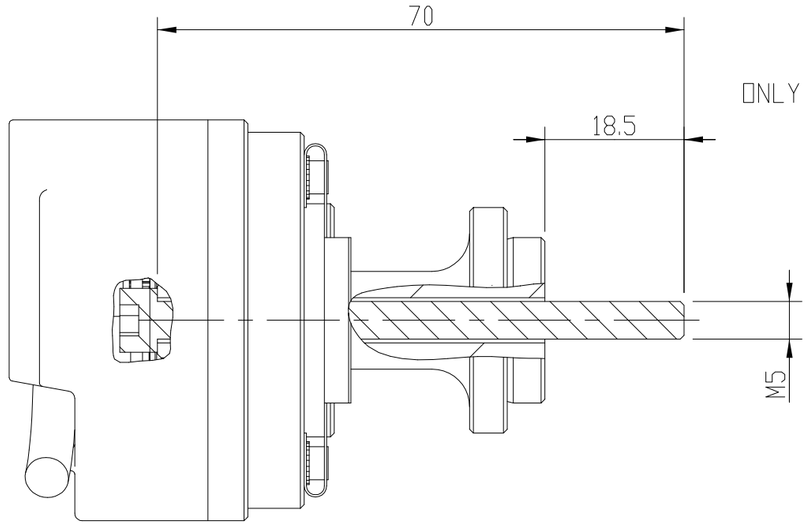

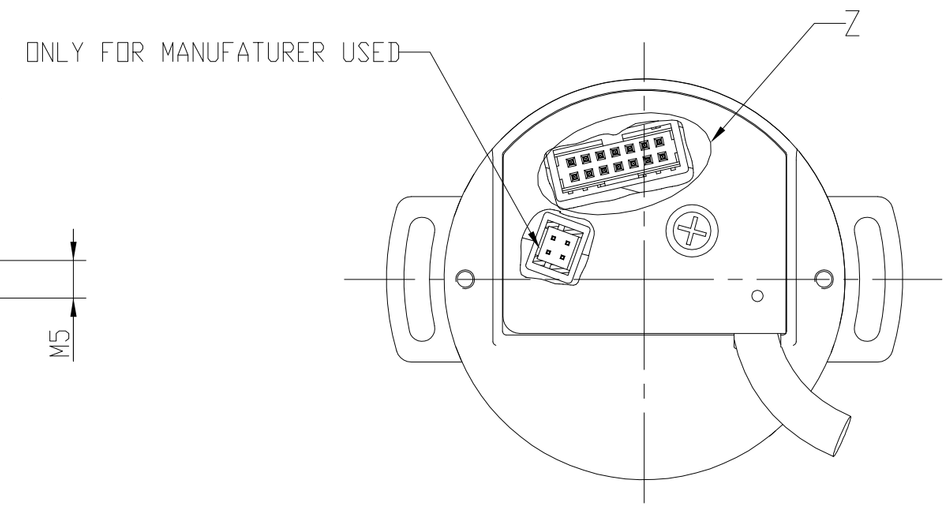

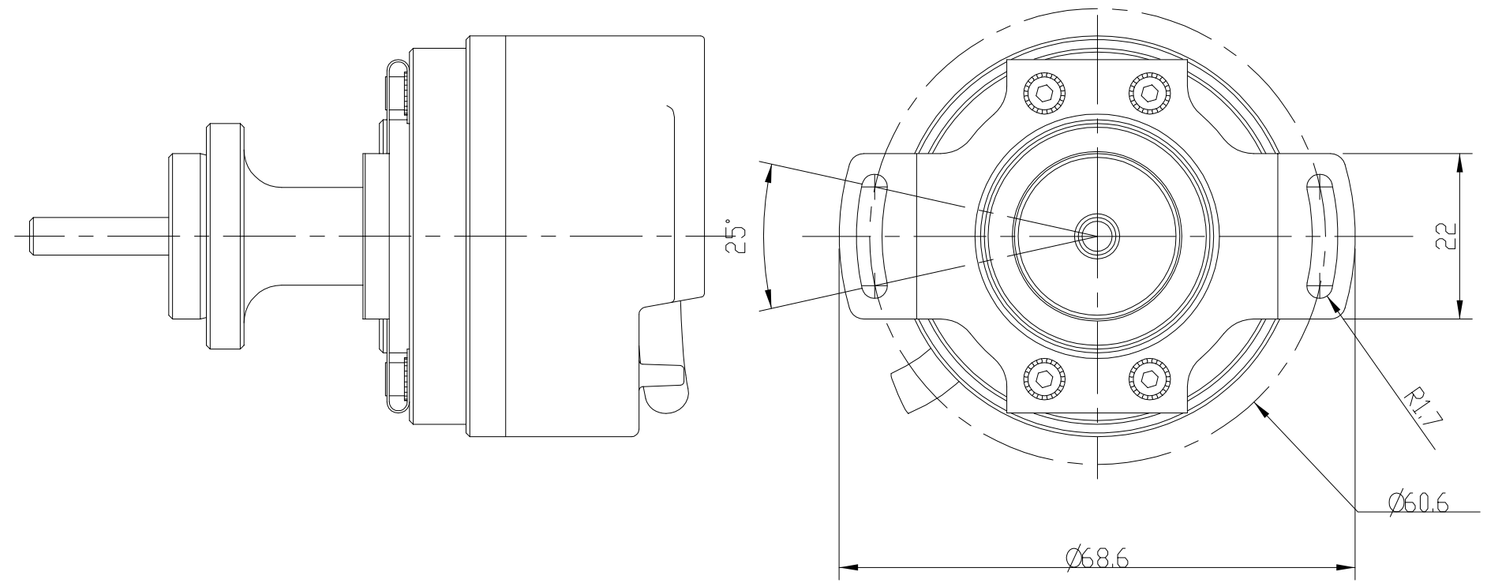

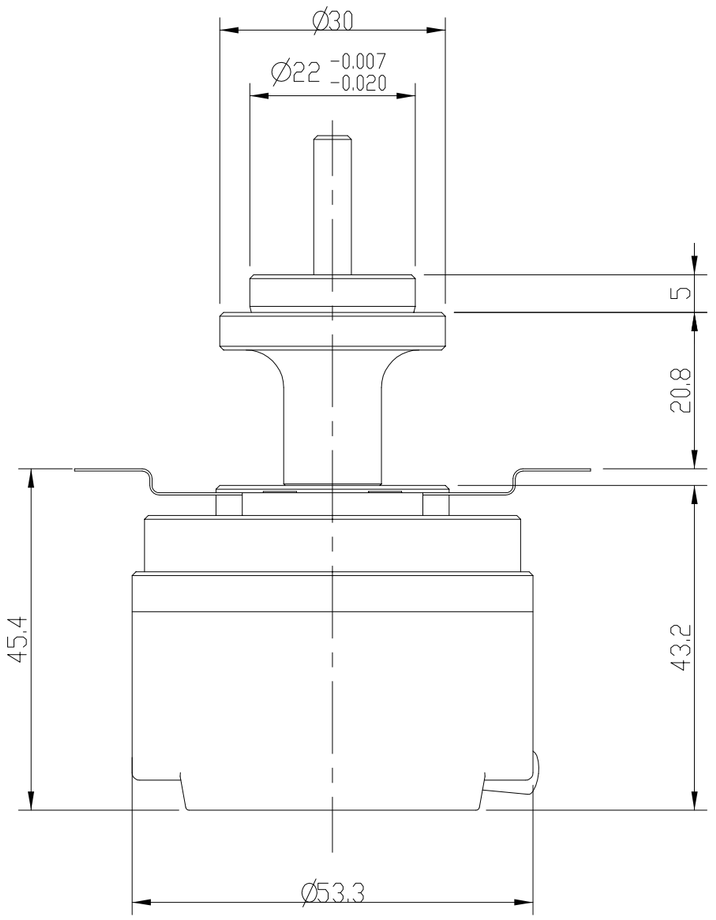

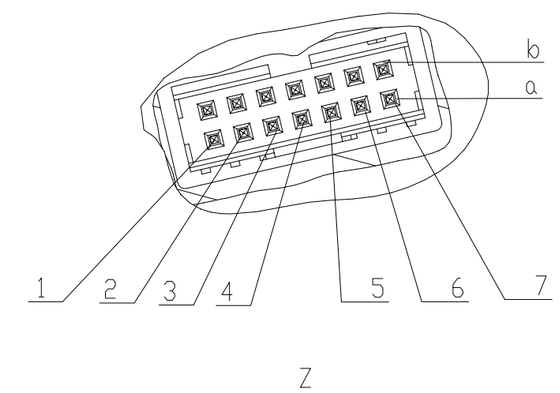

Electrical Data:
Code: Incremental with sin/cos interface
Number of pulses: 2048
Operating Voltage: 5 ±10% VDC
No-load supply current: 150mA max
Output Signals: sin/cos 1Vpp
Maximum Response Frequency: 180 kHz
Mechanical Data:
Weight: 200g typ.
Dimensions:
Outside Diameter with cover: 53.3mm; Mounting depth: 45.4mm
Material:
Bearing housing: aluminium;
Cover: aluminium;
Shaft: stainless steel
Mating Shaft Runout: ±0.1mm max.
(Includes shaft perpendicularity to mounting surface)
Mating Shaft Axial movement: max. ±0.4mm
Max. Velocity: RPM= (Frequency/PPR) x 60; or 1465 RPM,
or 1465 RPM, whichever is less;
Environmental:
Operating Temperature: -20°C to +100°C
Storage Temperature: -40°C to +120°C
Shock: 100 Gs for 11 msec duration
Vibration: 10 Gs at 5 to 2000 Hz
Relative Humidity: 95% non-condensing
Enclosure Rating: IP 41 (Cable needs to be oriented downwards)

Signal Format
CW SHAFT ROTATION

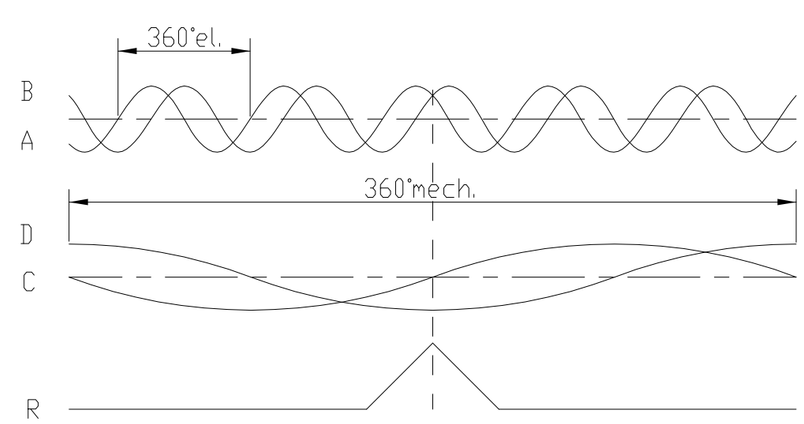

Connector		
PIN	Color	Function
1a	BRN	C-
1b	GRY/PNK	5V
2a	YLW	A-
2b	BLK	D+
3a	GRN/BRN	NC
3b	BLU	B+
4a	PNK	R-
4b	GRY	R+
5a	RED	B-
5b	WHT/GRN	GND
6a	VIO	D-
6b	GRN	A+
7a	RED/BLU	NC
7b	WHT	C+

TOLERANCES UNLESS INDICATED:			UNITS: mm	TITLE OUTLINE & SPEC, RS20,OPT07		
.XXX	.XX	ANGLES	MATERIAL: /	FILE NAME: 703199-0001	SCALE: /	COMPLIANCE REQUIRED
± /	± /	± /	FINISH: /	DRAWN: DEVIN	DATE: 2015-12-23	☐UL ☐CSA ☐CE ☐TUV ☐FCC ☐VCCI ☐RoHS ☐ATEX
©2015 D.T.C.			"C"SIZE	CHECKED: DEVIN	DATE: 2015-12-23	PRO/E MODEL: 703199-0001
HENGSTLER				RELEASED: YC	DATE: 2015-12-23	APPLICATION: RS20 OPT07
						DRAWING NUMBER 703199-0001 REV 1